2700-71

Core Dimensions

Height:41.375
Width:42.75
Depth:2.25

Description

Construction:Aluminum
Orientation:
Filler Neck:None
Inlet:2" NPT" ()
Outlet:2" NPT" ()
Oil cooler: - "

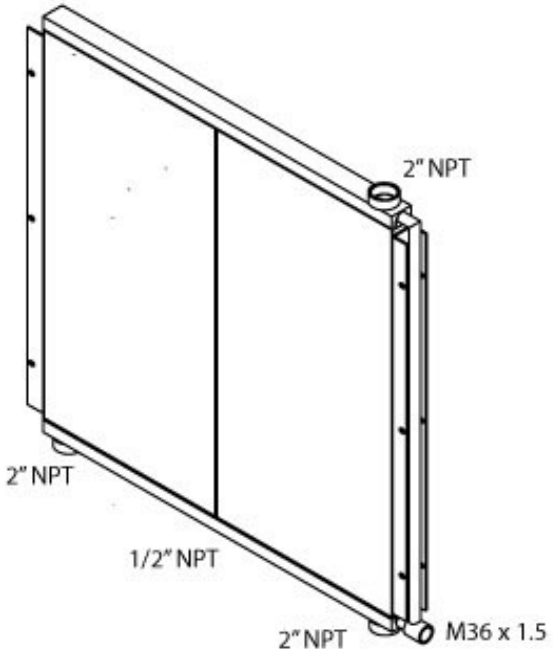

Copyright (©) 2010-2014 Active Heavy Duty Cooling. All rights reserved. No Part of this publication may be reproduced without written permission.